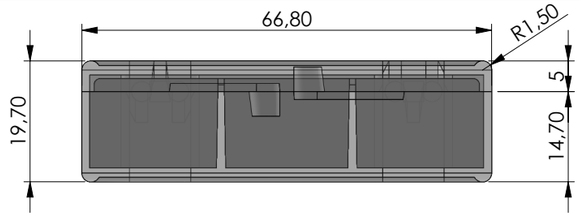

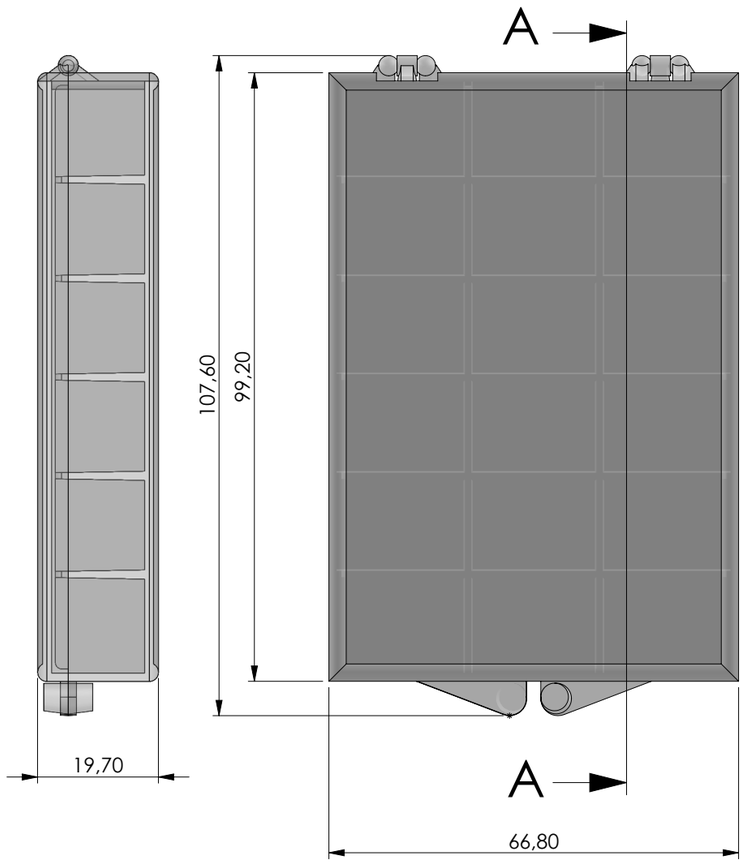

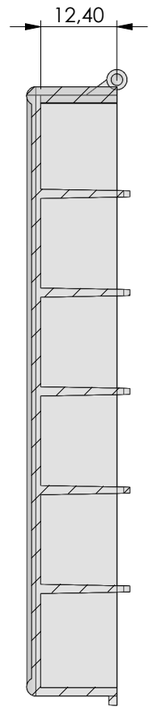

A-A

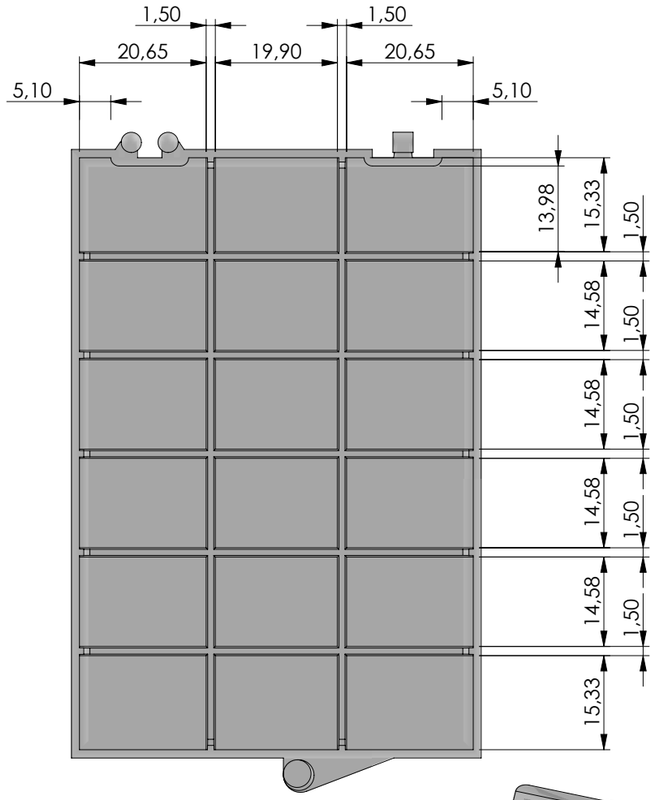

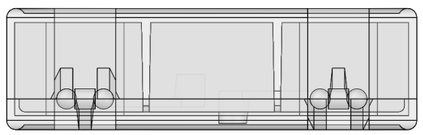

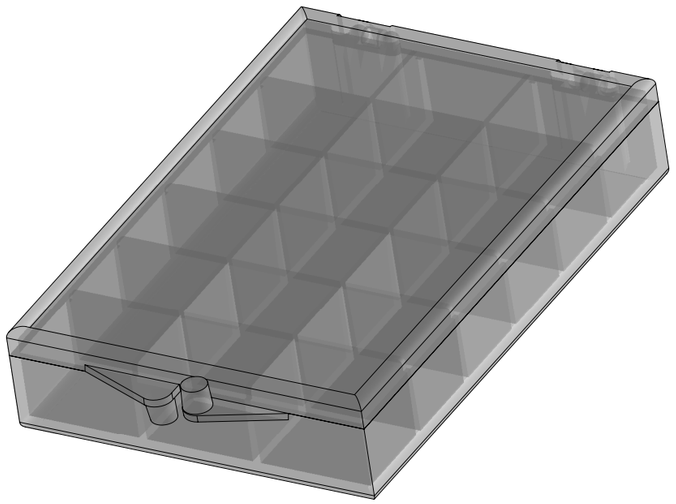

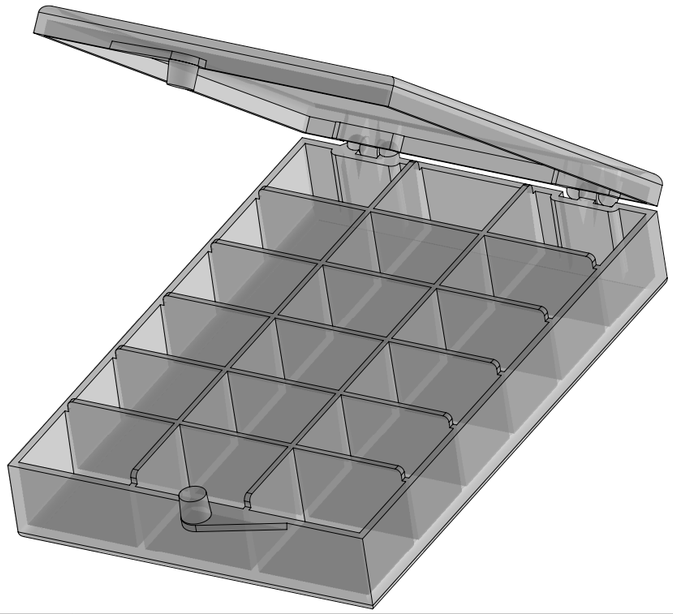

Proprietary and Confidential	**TEKO S.p.A.** Via dell'Industria 5 - S.Lazzaro di Savena - BO - IT
TEKO® ENCLOSURES	***Subject to technical modification without prior notice. Tipographical and others errors do not justify any claim for damages. All dimensions should be verified using an actual moulded part.***

Part Number:	Date:	Sheet:	First angle prj.
SDP18	08/01/2014	**1 of 1**	

*This document contains proprietary information of **TEKO S.p.a.** and is tendered subject to the conditions that the information be retained in confidence not be reproducer or copied and not be used or incorporated in any product*

Size:	Scale:
A3	**1:1**